Lecture No. 4

D/A and A/D Conversion Techniques

References
Modern Digital Electronics by R P Jain, McGraw Hill
Digital Principles and Applications, A. P. Malvino, D. P. Leach and G. Saha, Tata McGraw Hill

Dr. Davinder Pal Sharma , Department of Physics, UWI, St. Augustine, Trinidad & Tobago

Digital Data Processing System

Most of the real world signals or data are analog in nature. To process these signals or data through digital system first of all we have to convert it into digital form with the help of Analog to Digital Convertor (ADC), then digital processor processes the data. Output also should be in analog form so to convert processed digital data back to analog form Digital to Analog Convertor (DAC) will be required. Anti-aliasing and Reconstruction filters are also used for faithful conversion.

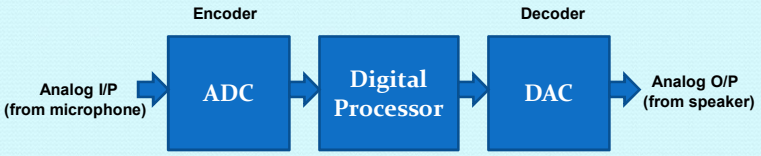

Digital to Analog (D/A) conversion is a straight forward process and is considerably easier than Analog to digital (A/D) conversion. In fact a DAC is usually an integral part of any ADC, that's why we will consider the D/A conversion process first.

Dr. Davinder Pal Sharma , Department of Physics, UWI, St. Augustine, Trinidad & Tobago

Digital to Analog Conversion

- We have to change n digital levels into one equivalent analog voltage. This can be easily accomplished by designing a resistive network that will change each digital level into equivalent binary weighted voltage (or current).

- Two popular resistor networks are mainly important for D/A conversion:

1. Variable resistor network or binary weighted resistor network
2. Binary ladder network

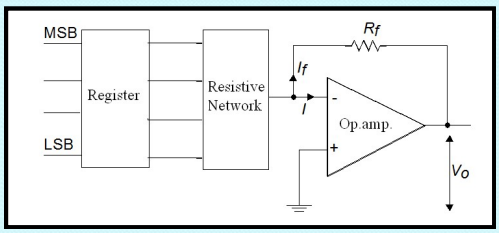

Binary ladder network is more popular than variable resistor network.

Variable Resistive Network

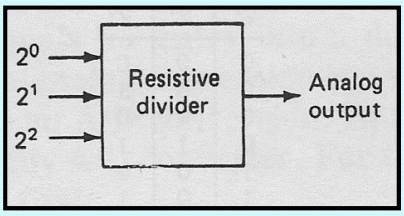

Digital input	Analog output
0 0 0	0 V
0 0 1	+1 V
0 1 0	+2 V
0 1 1	+3 V
1 0 0	+4 V
1 0 1	+5 V
1 1 0	+6 V
1 1 1	+7 V

- The sum of the weights must be equal to 1.

- Binary equivalent weight of LSB must be $1/(2^n - 1)$.

Binary equivalent weights

Bit	Weight
2^0	1/7
2^1	2/7
2^2	4/7
Sum	7/7

(a)

Bit	Weight
2^0	1/15
2^1	2/15
2^2	4/15
2^3	8/15
Sum	15/15

(b)

Variable Resistive Network

The analog output voltage V can be easily found by using **Millman's theorem** which states that the voltage appearing at any node in resistive network is equal to the summation of the currents entering the node (found by assuming that the node voltage is zero) divided by the summation of the conductances connected to the node. i.e.

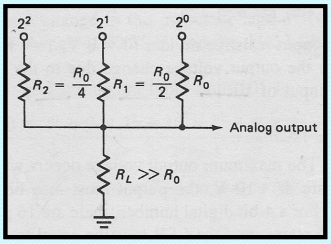

$$V = \frac{V_1/R_1 + V_2/R_2 + V_3/R_3 + \cdots}{1/R_1 + 1/R_2 + 1/R_3 + \cdots}$$

$$V_A = \frac{V_0/R_0 + V_1/(R_0/2) + V_2/(R_0/4)}{1/R_0 + 1/(R_0/2) + 1/(R_0/4)} = \frac{7/R_0}{1/R_0 + 2/R_0 + 4/R_0} = \frac{7}{7} = +1\ V$$

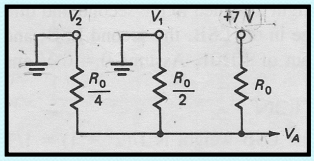

Design Criterion for VR Network

1. There must be one input resistor for each digital bit.
2. Beginning with the LSB, each following resistor value is one-half the size of the previous resistor.
3. The full-scale output voltage is equal to the positive voltage of the digital input signal. (The divider would work equally well with input voltages of 0 and $-V$.)
4. The LSB has a weight of $V/(2^n - 1)$, where n is the number of input bits.
5. The change in output voltage due to a change in the LSB is equal to $V/(2^n - 1)$, where V is the digital input voltage level.
6. The output voltage V_A can be found for any digital input signal by using the following modified form of Millman's theorem:

$$V_A = \frac{V_0 2^0 + V_1 2^1 + V_2 2^2 + V_3 2^3 + \cdots + V_{n-1} 2^{n-1}}{2^n - 1} \qquad (12.1)$$

where $V_0, V_1, V_2, V_3, \ldots, V_{n-1}$ are the digital input voltage levels (0 or V) and n is the number of input bits.

Weighted –register D/A converter

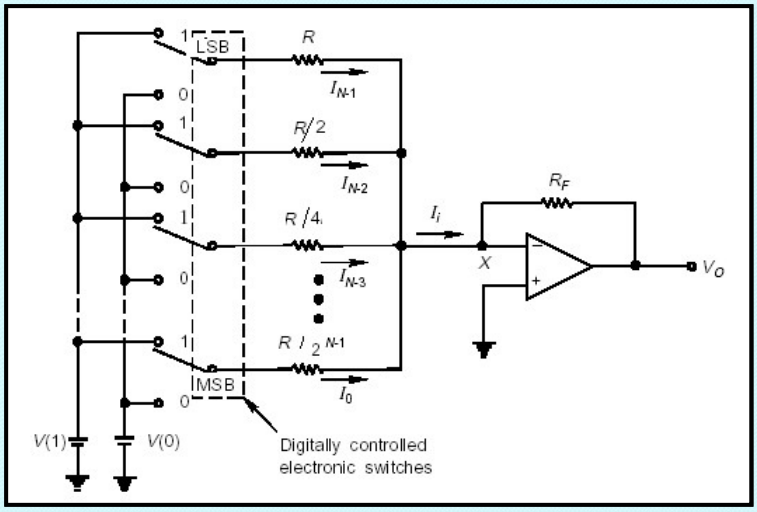

Drawbacks of VR Network

- Seldom used when more than 6 bits in the code word.
- To illustrate the problem consider the design of an 8-bit DAC if the smallest resistor has resistance R
  - what would be the value of the largest resistor?
  - what would be the tolerance of the smallest resistor?
- Very difficult to manufacture very accurate resistors over this range so they are costly.